2022 NC Renewable Ocean Energy Symposium
May 16 & 17, 2022

Green Hydrogen and Oxygen for electrification of ferry boats, sustainability of local business, water treatment and oxygenation in North Carolina Coast

Rodney Itiki, Madhav Manjrekar, Badrul Chowdhury, Dept. Electrical and Comp. Eng. of the UNC Charlotte

Coastal Studies Institute — A Multi-Institutional Research Partnership

CHARLOTTE EPIC

Objectives

Diesel is the main source of greenhouse gas emissions in the marine transportation. This work proposes a Photovoltaic (PV) solar plant combined with H_2 and O_2 production to support the substitution of diesel by H_2, as a energy carrier for ferry boats in N.C. Coast. The surplus O_2 may benefit coastal ecosystem.

Fig.1 Location of the proposed PV and H2/O2 production plant and the demand for H2 and O2 in the NC coast

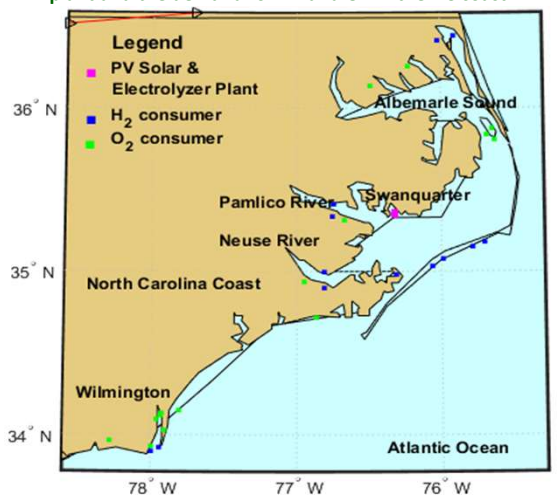

Fig. 1 shows:

- 14 existing terminals for ferry boats to be converted from diesel combustion motor to electric motors powered by H_2 fuel cell,
- 15 potential O_2 consumers (existing citric acid plant, wastewater treatment plant, welding workshop, hospitals, etc).
- 1 PV solar and water electrolysis plant with proposed capacity to produce around 836 tons of H_2 and 6,647 tons of O_2 per year,

Acknowlegments

The authors gratefully acknowledge Faria Kamal, Prithwiraj Roy Chowdhury for their comments and discussions; and the Energy Production and Infrastructure Center (EPIC) and the UNC Coastal Studies Institute for their funding support.

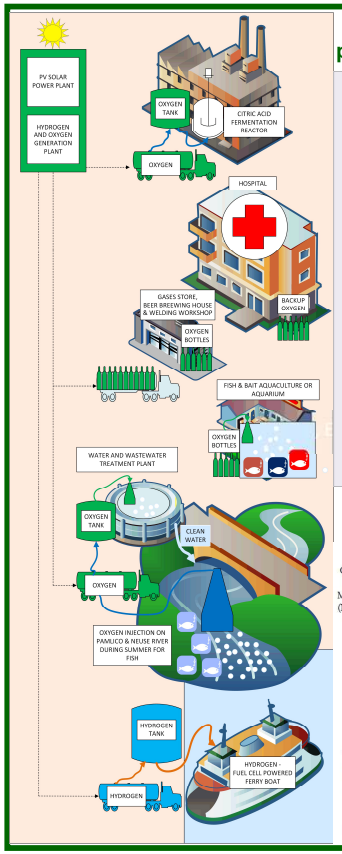

Fig. 2 Algorithm and software for PV solar power profile and H_2/O_2 production estimation.

1. Input data selection (Summer or Winter, Azimuth angle of PV modules, one-week simulation time scale).
2. Populate the geographical coordinates (latitude and longitude) of PV plant, H2 consumers, and O2 consumers in a map.
3. Drawing boundaries of missing islands and landmarks in the map (Wanchese islands, Outer Banks).
4. Calculation of Clear Sky irradiance (G) for each 1 MW PV plant for one-week period in steps of 15 minutes.
5. Agregate irradiance matrix for one-week in steps of one-hour.
6. Input of cloud shadding (sky cover) from the National Weather Service weekly forecast.
7. Calculation and plot of power profile with shadding.
8. Plot of clear sky irradiance (G)
9. Calculation and plot of H2 and O2 gas production.

Fig. 3 Diagram of a proposed pilot plant

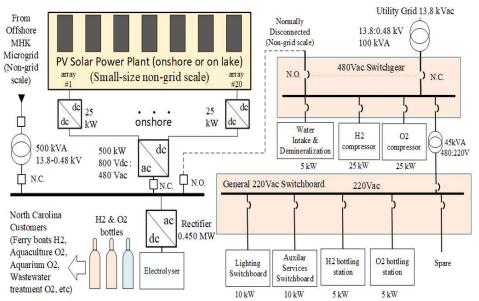

Conclusions and Future Steps

Economic benefits: substitution of importation of 1.38 million gallons of diesel from other states at a cost of 10.4 million USD, by around 815 tons of locally produced H_2 per year. This H_2 plant in NC Coast would create direct and indirect local jobs.

Environmental benefits: 6,647 tons of O_2 per year would be used for water and wastewater sewage treatment plants, O_2 injection for fish in Pamlico and Neuse River, and aquaculture in the N.C. Coast. Also, avoidance of 13,852 tons of CO_2 emissions from diesel into atmosphere.

Future steps: To evolve software's capabilities; To size the H_2 storage tank for summer peak.

Fig. 4 PV solar power, H_2 and O_2 production

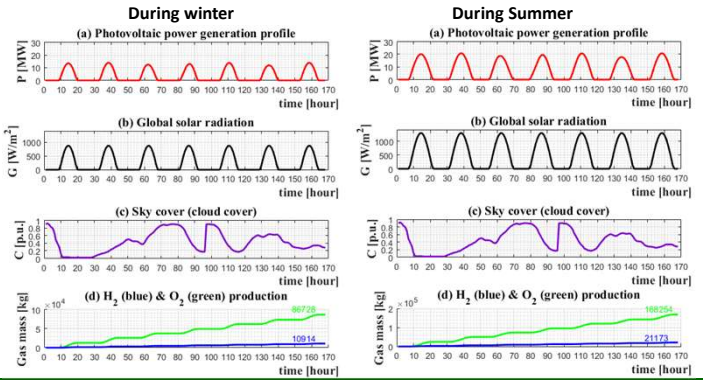

Results and Discussions

The simulations show that H_2 and O_2 output is almost double in Summer than Winter. Producing more H_2 and O_2 in summer is good for three reasons:

- H_2 consumption increases in Summer, because of high influx of tourists in this period. The number of vehicles served by the N.C. ferry system triples in Summer as compared to Winter.
- Tourists also demand more clean water in summer. The increased O_2 supply in Summer may be injected on sewage and water treatment tanks to accelerate the aeration.
- Also, fish kills in Pamlico and Neuse Rivers happen in Summers when the dissolved oxygen level is low. The O_2 surplus produced in Summer can be injected on Neuse river waters to save fish (O_2 ↑).

The preliminary assessment of the potential demand for the proposed green H_2 and O_2 production comes from the conversion of the NC ferry boat fleet from diesel to H_2 fuel cell propulsion. A PV plant with nominal capacity of 52 MW would produce around 836 tons of H_2 per year to cover this demand.

The construction of a future small PV and eletrolysis pilot plant (Fig. 3) is a prudent alternative for the empirical adjustment and validation of the algorithm for estimation of PV power profile, H_2 and O_2 productivity rates in local and real-world conditions of solar irradiance in N.C. Coast.

References

[1] **R. Itiki, F. Kamal, K. Singh, P.R. Chowdhury, M. Manjrekar, B.H. Chowdhury**, Offshore Microgrid platform for Marine Hydrokinetic Energy and Hydrogen production in North Carolina, Poster presented at: *International Conference on Ocean Energy (ICOE)*, April 28-30, 2021, USA.

[2] **R. Itiki, P. R. Chowdhury, F. Kamal, M. Manjrekar, B. Chowdhury and G. G. Bonner**, "Method for Estimation of Marine Hydro-Kinetic Power based on High-frequency Radar Data," *OCEANS 2021: San Diego – Porto*, 2021, pp. 1-7, doi: 10.23919/OCEANS44145.2021.9705675.

[3] **Steve Bert, Nicolas Norboge, Joy Davis, Weston Head, Justin Babich, Daniel Findley**, Economic Contribution of North Carolina's Ferry System, Institute for Transportation Research and Education (ITRE), 2020, Report NCDOT-87727. https://rosap.ntl.bts.gov/view/dot/54714.